HOW TO HOP UP Chevrolet & GMC engines

1951 Edition

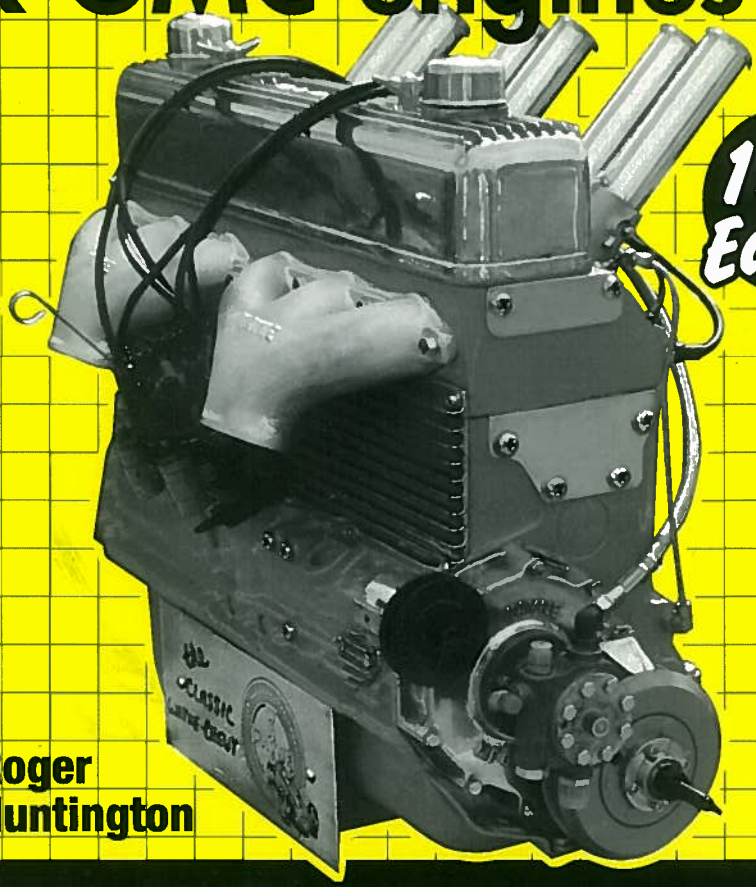

by Roger Huntington

SPEED TUNING THEORY
COSTS • H.P. & TORQUE

California Bill's
Automotive Handbooks

HOW TO "HOP UP" CHEVROLET & GMC 6-CYLINDER ENGINES

BY ROGER HUNTINGTON
MEMBER, SOCIETY OF AUTOMOTIVE ENGINEERS

California Bill's
Automotive Handbooks

P.O. Box 91858 • Tucson, AZ 85752-1858
www.californiabills.com

History Revisited

Forty-seven years later I am pleased to reprint Roger Huntington's *How to Hop Up Chevrolet & GMC 6 cylinder engines,* originally published in 1951 by Floyd Clymer in Los Angeles. Treasured by enthusiasts, by the 1990s these books had become almost impossible to find and good copies were selling for $50 at swap meets.

I personally knew Roger Huntington and always appreciated his insightful articles on automobile design and especially on automotive performance.

Although Roger Huntington was a paraplegic, he never let that stop him in his search for automotive knowledge. You just never knew when you would see Roger in his wheelchair–at drag races, at press introductions at GM, Ford or Chrysler, out "test driving" as he rode along and got impressions of how a new car handled and performed. Then he would write about what he learned and how he felt about the car. His byline appeared in almost every automotive magazine of the day. Roger Huntington's was synonymous with then-current knowledge about high performance.

I know you will enjoy reliving history as you turn the pages of this automotive performance classic.

Thanks to Keith Young for the beautiful cover photo of one of his Wayne Chevrolet engines. This particular engine was chosen for display in the Petersen Automotive Museum in Los Angeles during 1996-1997.

Bill Fisher
September 15, 1997

Table of Contents

Acknowledgment

We desire to thank the following firms and persons which assisted in supplying data on their products, photographs, and general information used in this book:

Wayne Manufacturing Company
Nicson Engineering Company
JE Engineering Company
Ed Iskendarian
Edelbrock Equipment Company
Italmeccanica, Inc.
Besasie Engineering Company
Newhouse Automotive Industries
Lee's Speed Shop
Wolfer Corp.
Hilborn-Travers Engineering Co.
SpeedOmotive
Chet Herbert
McGurk Engineering Company
Witteman Company
Tattersfield Company
Edmunds Equipment Company
O'dell-Shields Studios
Automotive Industries
Asher Lee

Fig. 1-1. Johnny Hartman's famous No. 59, the first really hot competition car to use the 6-cylinder Chevy block. The engine was built by Wayne Horning and developed 220 hp.

CHAPTER 1

THE WHY AND THE WHEREFORE

NOT so long ago — only a few years, in fact — 200 horsepower from a Chevrolet block was just a wild dream of a young Los Angeles mechanic!

In May, 1948, after several years of experiment, Wayne Horning threw the book at that lowly stock mill and came up with an astonishing 220 hp from a Class B piston displacement of 248 cu. in. This high-revving fireball went into the now-famous No. 59 *"Hartman Torsion Bar Spl."*, a glorified hot rod that immediately began showing Fords and Mercs the short way around on California tracks — and chalked up a sizzling 140.18 mph on the dry lakes.

So after a decade of packing around a lower end that "had the stuff in it", the 6-cylinder Chevy finally flexed its muscles, and thus started the soupers' stampede toward this beautifully-designed General Motors production engine. Today they tell us you can get 1 hp for every 3½ lbs. of engine weight in the 150-hp range for less money with the Chevy than with any other engine in the world!

So here we are with a big problem on our hands: How to soup up that Chevrolet block to get the most power for the least cost, and how to plan for the best possible performance and service under our particular "souping conditions". Now that all seems pretty obvious. But is it? Let's investigate these basic aims a little more closely before we haul out the wrenches and calipers.

WHY SOUP?

That's not a silly question. Here's Leadfoot Louie, our moron hot-rodder, recently turned from the V8 to the Chevy block, who's busily engaged souping his engine to get (and we quote) — "200 hp, 25 miles per gallon, 100,000 miles between overhauls, and smooth, flexible performance at all speeds." What a rude surprise Louie's going to get when he adds up his operating and repair bills, when he steps down on it at 15 mph in high gear, or when he tries to keep it going through town on a cold morning (if he can start it)!

No, you can't have everything. We're after just *one thing* when we soup up a stock engine — maximum horsepower at all speeds. Even this is a pretty big order. But the point is, don't expect pennies from heaven in your souping — things like economy, easy starting, silent running, smoothness, and flexibility When you're after power, these items just don't follow hand-in-hand. In other words, your souped engine is great for "hot" transportation — not so hot for transportation *in general.*

Which brings us to another important question: If all we're after is 150 or 160 hp, why not buy a new reconditioned Packard, Lincoln, or Cadillac engine that will give this much in stock form? Then we wouldn't have to lay out a lot of money for special parts, and we could cash in on those extra dividends such as economy, silence and smoothness.

This question gets us right to the heart of this souping business. It's all

Fig. 1-2. The Chevrolet-powered "Johnson Spl.", entered for the 1951 Indianapolis race. The Wayne-Chevy engine developed 265 hp at 5000 rpm on methanol fuel. Of several semi-stock engines entered for the "500", this car had the highest lap speed — turning a consistent 125 mph.

Fig. 1-3. Grand Prix maestro, Juan Fangio, in his Wayne-equipped Chevrolet racer in South America. He won the Buenos Aires G.P. last winter.

a matter of engine size and weight. To get the maximum possible speed and acceleration out of any vehicle on a given HP — be it a car, boat, motorcycle, or airplane — we want the lowest possible gross weight and size. This, of course, implies a light, compact engine.

Large passenger car engines such as the Lincoln and Packard don't fill the bill; they're bulky, and weigh in the 700-900 lb. range. The little Chevy 6, on the other hand, is compact and weighs only 575 lbs. Special souping equipment doesn't appreciably alter this total weight. In other words, we soup to get a powerful, *small* engine, not just a powerful engine. (In all fairness, we must admit that, if engineers go much farther with stock engines — as witness the 700-lb. 180-hp Chrysler V8 — they're going to make pikers of all of us who spend our time and money souping a Ford or Chevy!)

While still on this subject of why we soup a stock engine, we might mention one other good reason: Because we can't *afford* a *really* hot engine. That sounds funny in this day of 200-hp Fords and Chevys, but think about it: For something between $2,000 and $10,000, we could go and buy an out-and-out racing engine that would kick anything from 200 to 400 hp for a weight in the neighborhood of 500 lbs. — on pump gas!

But not one in a thousand can put up that much money — hence this souping business. We might sum it all up this way: If we're going to get 150-250 hp for an engine weight of 500-700 lbs., and for a total investment of well under $1,000, we have no choice but to turn to the small stock block.

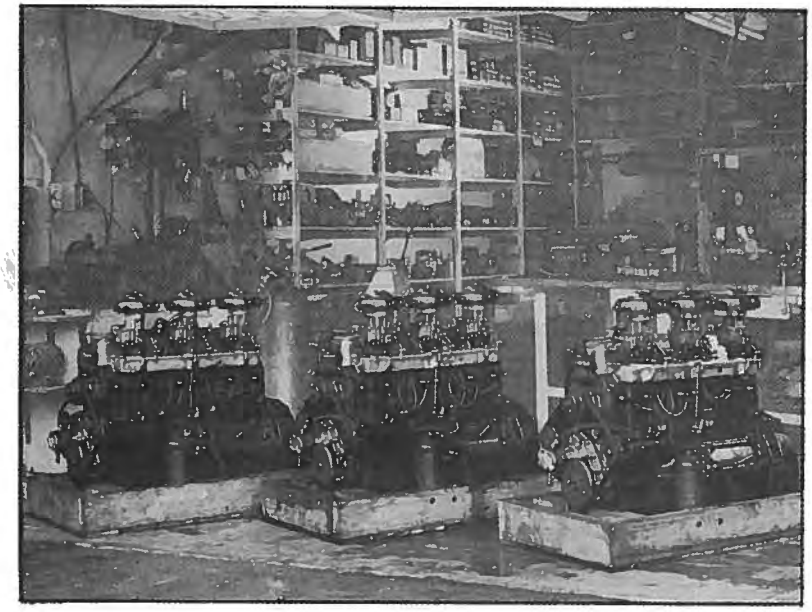

Fig. 1-4. Three beautiful Chevy engines being crated at the Wayne Mfg. Co. for shipment to South America, to be used for stock car road racing. These units are built with 8½:1 compression ratio to burn the low-octane pump gas available in the Latin countries. Price, around $1,050 each.

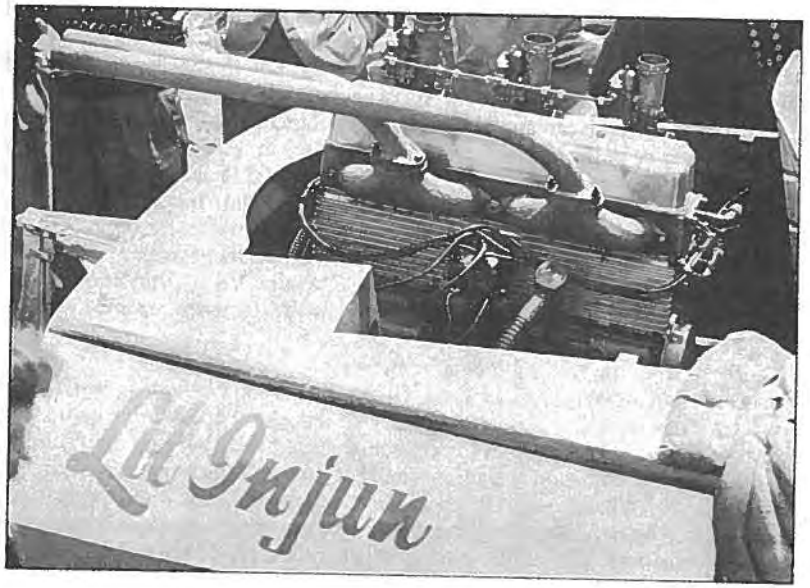

Fig. 1-5. The Chevy takes to the water. The Wayne engine installation in "Lil Injun" Class E racing runabout.

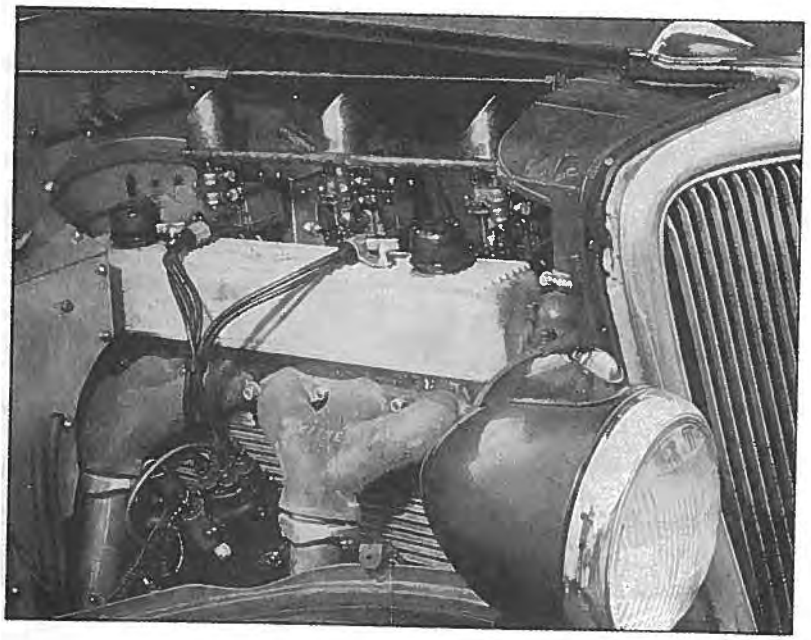

Fig. 1-6. Operation shoehorn. A Wayne-Chevrolet engine installed in a '34 Ford roadster; note that the firewall has been deeply recessed to accommodate extra length of the Chevy block.

PITY THE POCKETBOOK

Souping is not a poor man's game. And the fact that the Chevy is one of the most inexpensive engines on the market doesn't mean that a beggar can pour speed parts to it. As a matter of fact, the Chevy is in an odd position in this respect as compared to its arch souping rival, the Ford-Merc V8. With the V8, a man with very little money can have his heads milled for $10 and take his first significant souping step; with the Chevy it isn't quite so simple and you can't do anything that will help much for less than $30.

But on the other hand, as you go up the souping scale toward more and more power, your cost per HP drops below that of the V8. It's a funny situation, and it's all due to the overhead valves. Just remember that the pauper will have a harder time getting started on the Chevy block than he would with the V8.

Then there's the matter of labor. A lot of people, for one reason or another, can't do a bit of their own engine work such as disassembly, adjusting valve clearance, etc. It's going to cost these fellows just about $3 per man hour to have this work done for them — and this must be taken into account in their cost estimates. In general, it will run something around $70 in labor to pull the Chevy engine, tear it down, assemble, and replace it in the car. Labor costs for the smaller jobs will scale down from this. In other words, for the boy with limited funds who can't do his own work, labor costs will be a very important item, and may prevent tearing the engine down in the early stages.

For the rodder who has the ability, equipment and time to do his own engine work, we have a different situation. He can do wonders with $100, and he will be able to build up his super track engine for perhaps $200 less than the "white collar" souper. So the factor of costs will be a major item in any souping plan.

We might sum up the matter of costs this way: If you can't do any of your own engine work, it will take $50 to do much with the Chevy, and perhaps $600 to get upwards of 200 hp on pump gas. If you can do some of your own work, you might do business for $25 at the bottom end and $400 at the top.

These are hard, cold facts. And the fact that this souping business is something that gets into your blood makes the cost factor even more critical. If you've ever had a *fast* vehicle under you, you know it's hard to be satisfied until it is just a little faster. That means more money. It's something like a drunkard who wants his liquid cheer whether Junior gets the new pair of shoes or not. Similarly with souping — some can afford it, some can't. It's well worth some sacrifices, but don't lose your head. If you can't eventually see a couple of hundred dollars in special parts for your Chevy, don't expect miracles on the road.

So that is what this game is all about. It's a great life. It's certain that any sporting thrill, be it running 85 yards through Notre Dame for a touchdown, beating Sam Snead on the golf course, winning a World Series with a home or riding the Kentucky Derby winner, will have to go some to equal the thrill you get when you build up a car with your own hands, gun it, then feel it try to pull out from under you and run up to 120 mph.

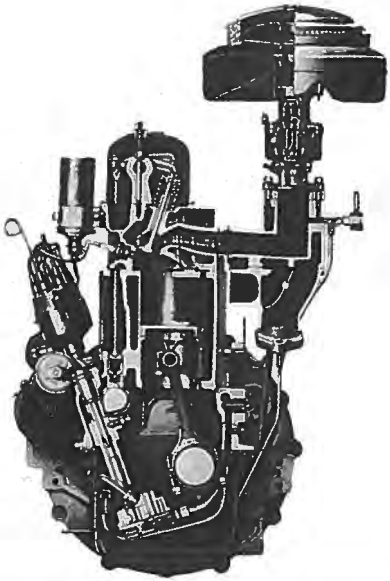

Fig. 2-1. (Left) — Front cross-section of the basic Chevrolet engine (Powerglide).

Fig. 2-2. (Below) — Side cross-section of the late standard 216-cu. in. Chevrolet engine.

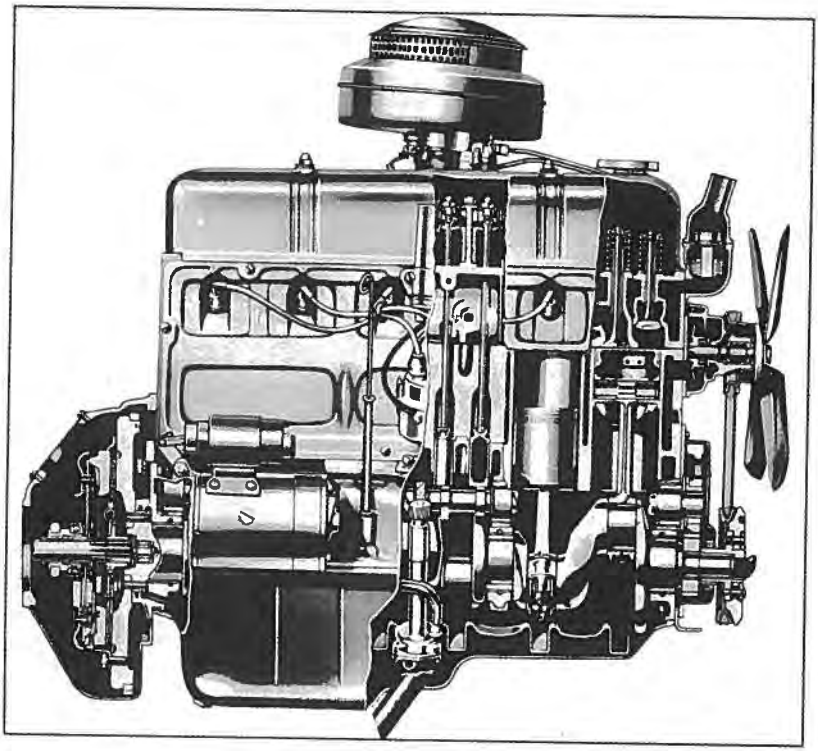

Automotive / Nostalgia

This Roger Huntington classic will help you understand how things were done around 1951.

Shows classic speed equipment developed and manufactured by Barker, Belond, Besasie, Champion, Clark, Edelbrock, Edmunds, Chet Herbert, Hilborn, Horning, Howard, Iskenderian, Italmeccanica, JE Pistons, Mallory, McGurk, Newhouse, Nicson, Spalding, Tattersfield, Venolia, Vertex, Wayne, Wico and Zoller.

Explains the Chevy power family, the paths to power, block modifications and assembly, boring and stroking, cylinder heads and modifications, intake manifolds and carburetors, ignitions, superchargers, estimating horsepower, planning the job to get the most performance for your money. Clearances and general operating instructions are provided for the Wayne-equipped engine. One section is devoted to the GMC 6-cylinder engine.

Reprinted from the original 1951 edition which sold for $2!

A classic guide for any auto buff's library.

ISBN 1-931128-07-3
$19.95 U.S.

9 781931 128070 EAN

California Bill's
Automotive Handbooks

California Bill's
Automotive Handbooks

HOW TO HOP UP CHEVROLET & GMC ENGINES

Author: Roger Huntington
Price: $19.95
ISBN: 9781931128070
Dimensions: 8.5 x 5.5 x .5 inches
Weight: 0.56 lbs

Speed tuning theory and practice, costs, horsepower and torque for 1937-54 Chevrolet 6s, plus the 228, 248, and 270 GMC engines. Fitting the block, stock and special Wayne and Horning cylinder heads, rocker arms, pushrods, cams, boring for larger pistons, rings, drilled crank-shafts, intake manifolds, exhaust headers, ignitions and superchargers. Shows classic speed equipment developed and manufactured by Barker, Belond, Besasie, Champion, Clark, Edelbrock, Edmunds, Chet Herbert, Hilborn, Horning, Howard, Iskenderian, Italmeccanica, JE Pistons, Mallory, McGurk, Newhouse, Nicson, Spalding, Tattersfield, Venolia, Vertex, Wayne, Wico and Zoller. Explains the Chevy power family, the paths to power, block modifications and assembly, estimating horsepower, planning the job to get the most performance for your money. Clearances and general operating instructions are provided for the Wayne-equipped engine. One section is devoted to the GMC 6-cylinder engine. Reprinted from the original 1951 edition. A classic guide for any auto buff's library.

CLICK TO PURCHASE

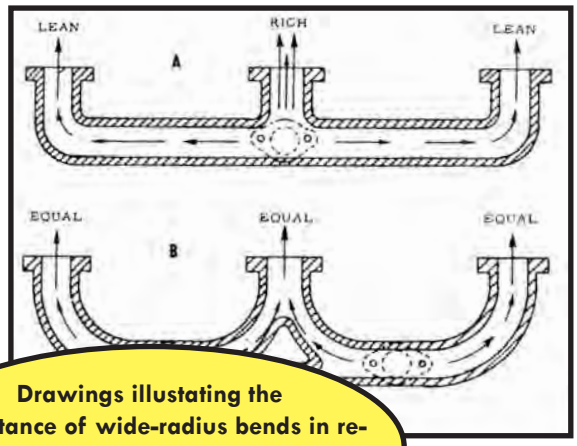

Drawings illustating the importance of wide-radius bends in reducing flow losses in a manifold; Manifold "B" is the preferred setup.

The Chevrolet-Powered "Johnson Spl." entered for the 1951 Indianapolis race. The Wayne-Chevy engine developed 265 hp at 5000 rpm on methanol fuel. Of several semi-stock engines entered for the "500," this car had the highest lap speed – turning a consistent 125 mph.

Complete Wayne-Chevrolet head assembly with exhaust manifolds, pushrods, etc.

California Bill's Automotive Handbooks
PO Box 91858 | Tucson, AZ 85752-1858 | Phone: (888) 511-1530 | Fax: (888) 511-1501

Table of Contents:

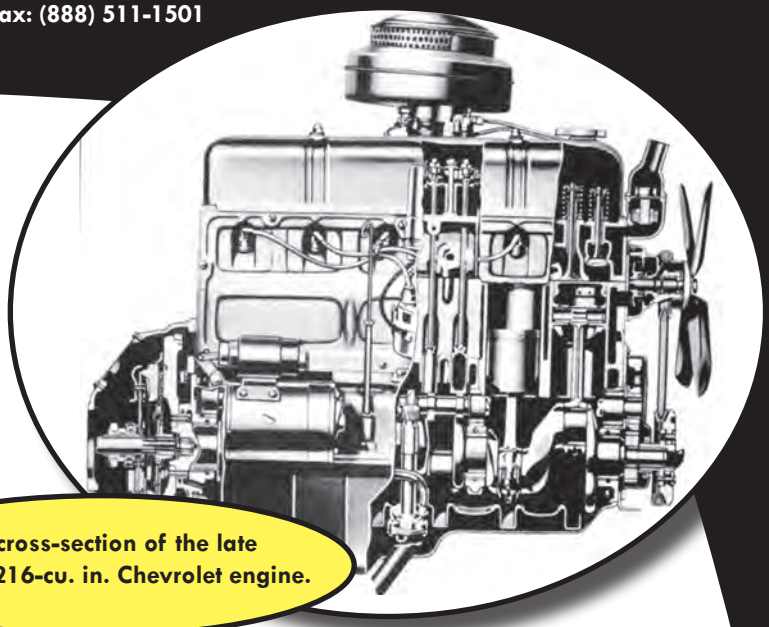

Side cross-section of the late standard 216-cu. in. Chevrolet engine.

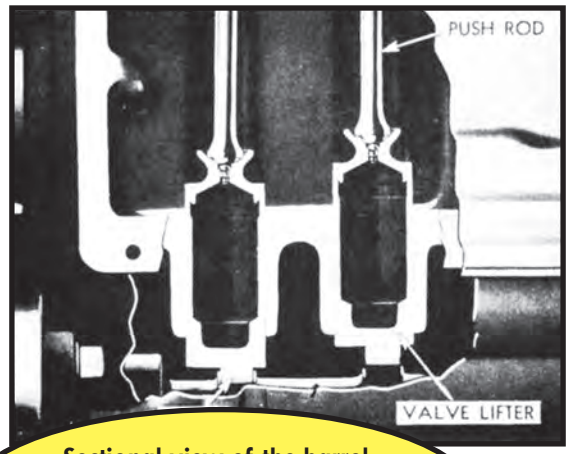

Sectional view of the barrel-type tappets used on post-1937 Chevy engines (except powerglide).

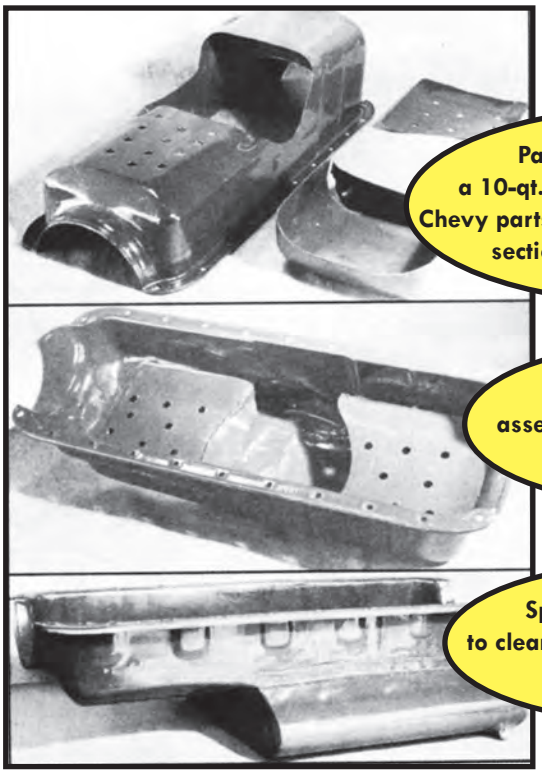

Parts required to build up a 10-qt. "wet" oil sump, using stock Chevy parts; note horizontal baffle for near section and the vertical baffle.

Ten-quart wet sump assembled from parts shown above.

Special 10-qt. wet sump to clear the steering linkage in late Chevrolet chassis.

Roger Huntington was known as the dean of automotive technical writers in the early era of hot rods and racing performance. Although wheelchair-bound due to a swimming accident at age 15, this didn't stop Roger in his quest for automotive knowledge. You just never knew when or where you would see Roger–at drag races, at press introductions at GM, Ford, or Chrysler, out "test-driving" as he rode along and got impressions of how a new car handled and performed. Then he would write about what he learned and what he felt about the car. His byline appeared in almost every automotive magazine in the 1950s and 1960s including *Auto Car, Motor Trend, Car Life, Road & Track, Car & Driver, and Hot Rod Magazine* to name a few. He wrote a regular column for *Speed & Custom Dealer* for more than 15 years.

Roger Huntington's name was synonymous with then-current knowledge about high performance.

You will enjoy reliving history as you turn the pages of this automotive performance classic.