HOW TO HOP UP Ford & Mercury V8 ENGINES

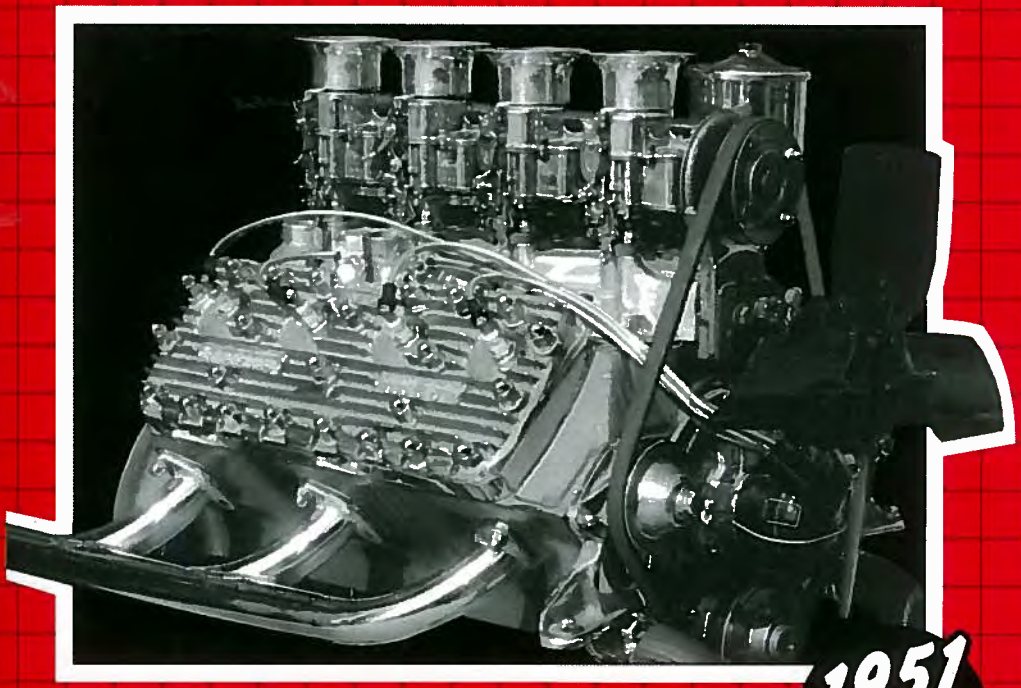

1951 Edition

by Roger Huntington

SPEED TUNING THEORY
COSTS • H.P. & TORQUE

California Bill's
Automotive Handbooks

HOW TO "HOP UP" FORD & MERCURY V8 ENGINES

BY ROGER HUNTINGTON
MEMBER, SOCIETY OF AUTOMOTIVE ENGINEERS

California Bill's
Automotive Handbooks

P.O. Box 91858 • Tucson, AZ 85752-1858
www.californiabills.com

Table of Contents

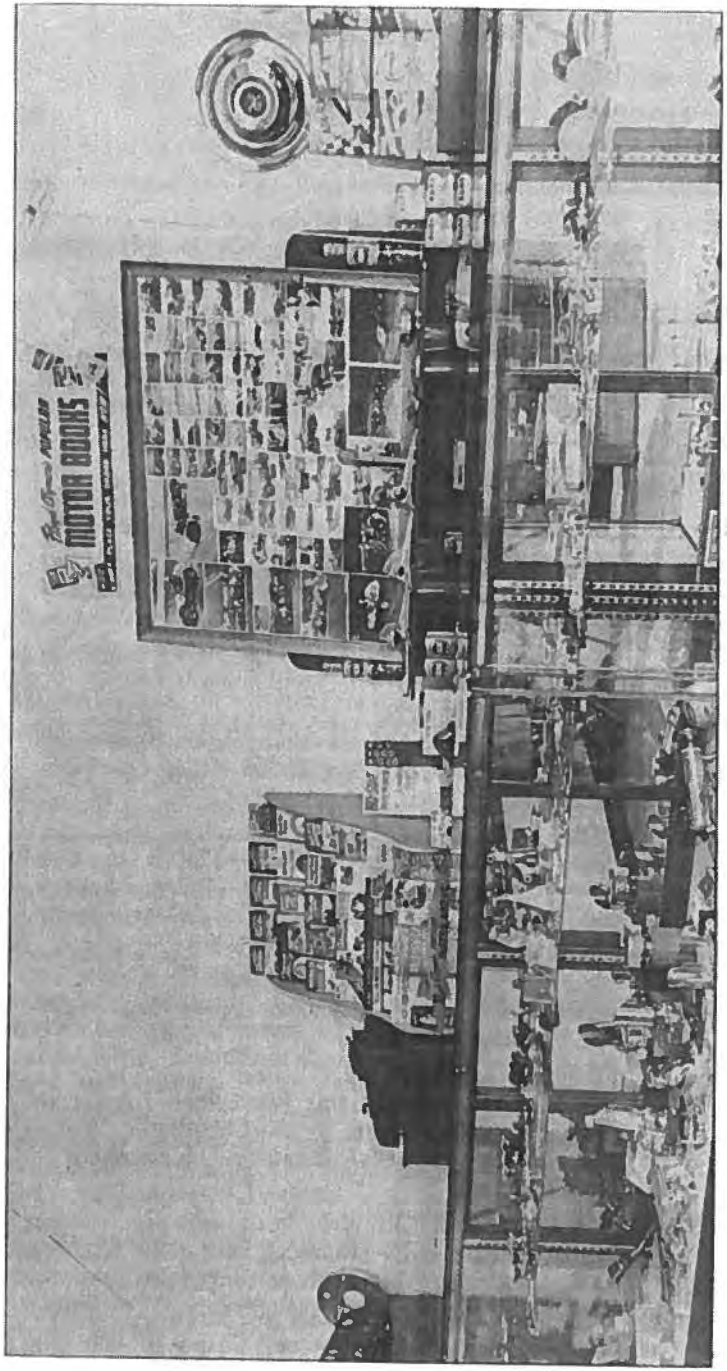

Fig. 1-1. The sale of speed and custom equipment to hot-rodders runs into millions of dollars a year. Speed shops now cover the U.S. Here's a view inside Shell Auto Parts, Los Angeles.

CHAPTER 1

WHAT'S IT ALL ABOUT?

WHEN Harry Miller was hired by the Ford dealer organization back in 1935 to design and build a fleet of semi-stock Ford racing cars — a skeptical automotive world watched the first serious attempt to soup up the famous "V8" engine.

The whole deal was a little ironical too. Here was Mr. Miller, world-famous designer of special race equipment, doing his best on a stock flat-head block to compete with his own overhead-cam engines! He did right well to squeeze 160 horses out of that little passenger-car plant, but his front-drive cars were always 3½ seconds slower on lap time at Indianapolis than the 4-cylinder Millers. Anyway, even if the car wasn't a world-beater, we've got to give Miller the credit for taking those first faltering souping steps with the Ford V8.

And who would have predicted 15 years ago that backyard wrench-wrestlers would be pulling 250 hp from that basic block today? Sometimes progress moves in mysterious ways! But move it did, and today we find the Ford-Mercury V8 engine right at the head of the "souper's" list of raw material. Harry Miller was the pioneer of more than he ever realized!

WHAT ARE WE AFTER?

Before we get any further into this complicated souping business, perhaps it would be a good idea to pause right here and ask ourselves just what we're trying to do. What are we after? Certainly the American stock car engine — the Ford included — is no stinker when it comes to all-around performance, economy, price, wear, or anything else. Why are we hot to rework a piece of machinery that apparently is already doing a beautiful job?

Our Leadfoot Louie, the moron hot-rodder, pops up from behind a bench where he's "regrinding" his own cam with a file — and for once he makes a profound statement: "I'm souping up my V8 engine because I want more horsepower. I don't expect phenomenal gas mileage, she'll run rough and noisy, and I know the torque won't be worth sweat below 1500 revs, but I want 150 horses under that hood that I can tap when I want 'em."

Louie is right. Power is the big thing. But we'd like to ask Louie a couple of questions: If 150 hp is all you're after, a big straight-8 Packard engine would cost you less than your souped V8, and she'd run smoother, quieter, and the low-RPM performance would be a whole lot better. Why not get that? Or better still, you can easily pull 175 hp from a little 220 Offenhauser on pump gas — why not that?

Our Leadfoot Louie is dumbfounded, but shoots back, "That's fantastic. I've got a few little items like size, weight, and my pocketbook to think about, you know." And there you have it!

WHY SOUP?

Now we've hit smack at the real reasons for souping a stock engine. In other words, what we're after basically is not just a hot ENGINE, but a hot VEHICLE — whether it be a road car, a track racer, a boat, or an airplane. It's as simple as that.

You don't sink $500 in an engine to see it turn up 180 hp on Squeedunk Auto Parts' dynamometer. You do it to get a car that will all but crack your neck when you tromp on it — pick up from zero to 60 mph in nine seconds — or eat up Highway 10 at 170 ft. per second — or clock 122 mph at Bonneville or turn Gardena in 23 flat — or skim over Salton Sea at 80 mph! The vehicle is the thing, not the engine alone.

For this reason, an engine's size and weight are as important as its horses. We all know that the overall performance of a given vehicle, which includes acceleration and top speed, depends largely on its power, weight, and frontal area. To keep weight and frontal area to a minimum — that is, to get the maximum possible performance from a given horsepower — we've got to have a small, light, compact power plant. And souping doesn't appreciably alter an engine's size and weight.

That, in a nutshell, is why we engage in this madness. Obviously we get a lot more overall vehicle performance by souping a 90-hp, 400-lb. engine up to 160 hp than by fitting up a stock 160-hp job weighing 800 lbs. The Ford-Merc V8 engine weighs about 550 lbs. and can be quite readily souped to 180 hp in road trim; a fully stock engine in that power range would generally weigh twice this much (at least, before Chrysler and Cadillac began making overhead valve engines.) At any rate, the big reason behind our souping is to get a powerful, small engine — not just a powerful engine.

GET AN OFFY?

Then there's the question of using a full racing engine. Why not drop a little 400-lb. 220 Offy into your hot road chassis? Here's an easy 175 hp in a tiny, compact power plant, and at a weight you could never approach with a souped V8. And what a hot vehicle it would make, with that light, 4-throw crank!

Right here is where one of the nastiest gremlins we have to deal with in this souping business rears its ugly head — and that's the little item of costs! If we were all millionaires, speed equipment manufacturers and speed shops would fold overnight. Then we'd all buy ourselves an Offy — or maybe a 4½-litre 12-cylinder Ferrari, or some such $5,000 power plant— and all ride around in 300-hp cars. In other words, if you've got the dough, you can buy performance, and every other desirable engine feature, that will make any stock equipment look very ill.

But unfortunately, we're not all millionaires — hence this book. So if we expect to get upwards of 200 hp for an engine weight in the vicinity of 600 lbs., and for a total cost of say between $500 and $1,000 — we have no choice but to turn to the stock block. Ninety-nine percent of us can forget the Offys and Ferraris.

But there's one thing that should be kept in mind: If you plan to race for cash prizes with your equipment, definitely don't forget the Offy! Consider it carefully. For about twice what you'll pay for your souped stock engine, you can often pick up a fairly good used Offy that will outpull it by a wide margin and weigh a couple hundred pounds less. Your chances of making your racing pay off will be a lot better.

We can lay no better emphasis to this statement than to cite the 1950 Indianapolis race; Bob Estes of Inglewood, Calif. entered a beautiful Merc-powered car, souped to the limit with Ardun overhead valves. But it was some 5 mph slower than the slowest qualifier in the top 33--- Harry Miller's experience, 1950 style!

A lot of good Fords have trimmed a lot of poor Offys — but no Ford ever stayed ahead of a good Offy! It's too long and complicated a story to tell here, but the simple fact is that a stock block just can't compete on even terms with a special engine designed exclusively for racing. Too many guys have lost their shirts trying to prove it could! Remember this if you're going into racing.

Actually, the trend in American auto competition today is toward separating the special equipment from the semi-stock stuff. The big circuits (AAA, CSRA, etc.) encourage only the special double-overhead-cam engines, and you seldom see stock jobs running with these boys. On the other hand, the hot-rod and roadster organizations usually allow only stock blocks. There's not much mixed competition anymore, and that's the best for all concerned. At any rate, if the regulations don't bar double-overhead engines, we'd suggest that you think a long time before you jump into the battle with a stock block. The shirt you save may be your own!

MORE ABOUT COSTS

But even assuming you forget about special racing engines, your cost problems are far from over. Souping is definitely not a poor man's game, any way you look at it. You can't make a real move for much less than $50 and it's going to take a good $500 in your engine alone to give you a really hot vehicle. In fact, you can drop $1,000 without half trying!

Your average souping job on the Ford-Merc V8 will run around $250. Admittedly these costs might not break the average hot-rodder, but they're something to consider if you have a lot of other financial responsibilities. There's nothing so pitiful as the Leadfoot Louie with a family of four who can't really afford it, but sinks $150 in souping the family bus; that's not too bad, but the resulting performance increase seldom satisfies, and Louie can't sleep nights till he's sunk another $300 to get another 10 mph of speed.

Some can afford it — some can't. And we'd be the last person in the world to help deny Junior a new pair of shoes! So take your souping in easy steps to keep pace with your income. However, we will say that you can do a neat little job on the V8 for $125 which will give you a little more snap at all speeds. But don't expect your true top speed to go up more than 8%. Too many guys expect too much for too little. Every horsepower you add costs you money, and the higher you go, the more they cost.

Maybe we harp too much on costs, but we feel that they're an extremely important item in this souping business. It's one of the big reasons we're even doing this work, isn't it? Costs become even more vital for the simple reason that there are a million ways we can save — do big things with the same dollar that would do little things somewhere else. An experienced mechanic can sometimes get more "soup" with $100 than Leadfoot Louie can with twice that. So we're going to emphasize this subject of economy clear through this book, and try to direct you toward getting the very most for your souping dollar.

So now we're rolling. We've kind of gotten in the mood of the thing, we know what we're after, and we know more or less what we're up against financially. But the rewards are well worth it; the roaring of the wind at 100 mph — the throb of twin pipes at 5000 rpm — the back-breaking acceleration when you step down on it — pavement streaking under you at 170 ft. a second. Wow! It's terrific!

So come along and let's take a look at this fabulous engine we're going to work with.

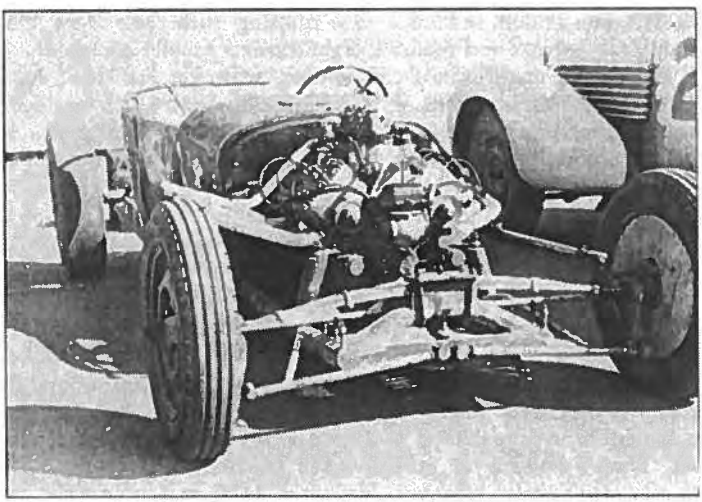

A successful experiment in sprint car design, this rig has turned well over 120 mph in ¼ mile, from a standing start. A tubular frame and unique I.F.S. system are featured. Engine is an over-bored Mercury, uses nitro methane mixture as fuel. Note absence of radiator.

CHAPTER 5

FITTING UP THE BLOCK

THE BLOCK setup is the most vital factor in the success of your souping efforts!

Too many guys give this subject only minor consideration in their "horsepower pipedreams." Anybody can stick in a reground cam, whack fifty-thousandths off the heads, or add a carb. But it takes a Leadfoot Louie to bore out 5/16ths and crack the cylinder walls — or neglect to rebalance after a bore and stroke job, and see his engine come apart at 6500 rpm — or run stock bearings and 30 lbs. oil pressure with a super-race track setup and have all kinds of lower-end trouble — or just stroke when he should bore, and waste $100!

So let's avoid Louie's blunders and give a little more attention to our block details. Our efforts will pay off in endurance and reliability as well as HP. (Incidentally, we are not going to deal with porting and relieving in this chapter on block work, as this subject properly belongs in a later chapter on the induction system.) So now that we have taken care of the preliminaries, let's dive right into this vital subject:

SELECTING A BLOCK

If you're one of the soupers in the "conservative" and "medium" categories — in other words, if you are just souping up the bread-and-butter vehicle that you drive to work, you won't have much choice. Your block is already there — soup it or leave it!

You should, however, put it in good condition before you soup up. The cylinder bores should be checked and, if they're worn over 0.002 in., they should be bored to the next standard oversize and fitted with new stock pistons and rings. All bearings should be replaced if worn, and the crankshaft should be checked for "out-of-round" and taper, and ground undersize if any journal is over 0.001 in. out. Also check the rods for alignment. If you've taken good care of your engine, driven fairly easy, and don't have over say 25,000 miles on it, you shouldn't have to worry about these items. (In fact, unless you're in serious doubt about the condition of your engine, it would hardly be practical to tear it down just to inspect it for a very mild souping job.)

For the hot road and competition conversions, you'll probably be building your car from scratch, and you might very well start with a brand new block too. At least the rods should be new. We don't like to insist on a big investment in a lot of new stock parts; you pay plenty for special stuff as it is. But just remember that machinery gets "tired" — no matter how much you've reground or refaced or reset. Fatigue cracks set in the metal and, before you know it, a block or a rod or a crank has fractured. In other words, don't take a block that's been on the road ten years and has 150,000 miles on it, and try to pull 220 hp from it. You might — and

you might not. Why take the chance? If you have a fairly new block, okay.

INCREASING THE BORE

Increasing piston displacement is a basic step toward more HP, as we learned in Chap. 4, because this increases the weight of fuel-air mixture drawn in on the intake stroke. But the most important effect of increased displacement as far as our souping work is concerned is this: IT IS ONE OF THE FEW STEPS WE CAN TAKE THAT WILL BOOST THE H.P. AT LOW ENGINE SPEEDS! On a road car, our low-RPM output is vital, since we must have some acceleration at very low speeds for street driving.

An effect of increased displacement is to boost HP (or torque) over the whole speed range — but especially at low speed. Fig. 5-1 shows what we mean; it shows differences in the power curves resulting when peak HP

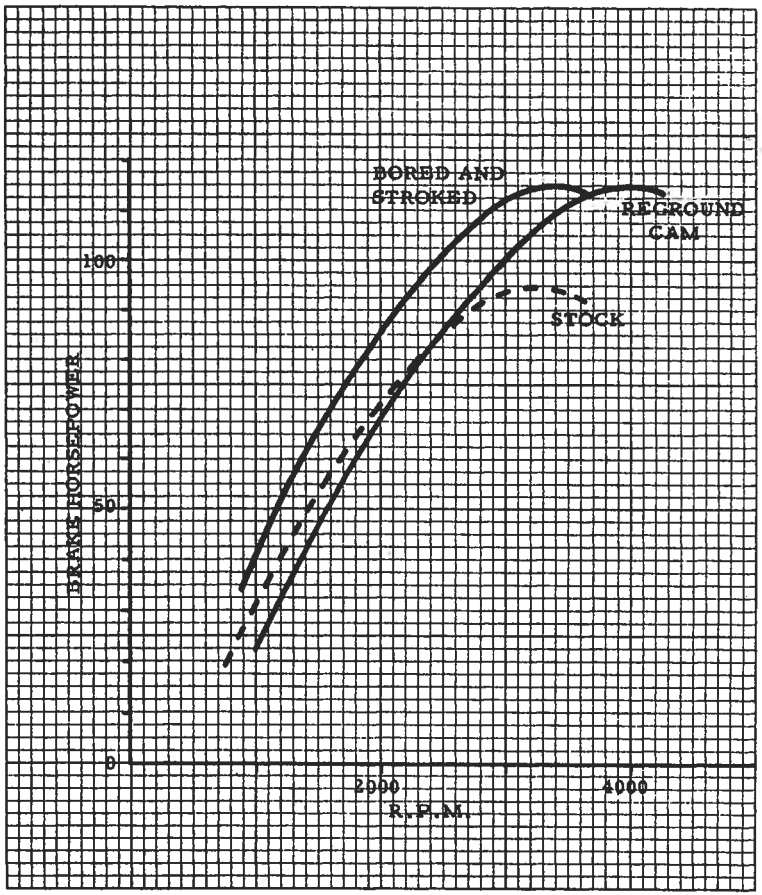

Fig. 5-1. What happens to low-RPM output when you raise HP by 15% with a reground cam, or by increasing piston displacement.

is boosted 15% by increased displacement and by a reground cam. See what we mean by low-RPM output? So remember, increased displacement is vital if you're after an engine with lots of guts at low speed.

At any rate, increasing the bore is the most effective way to raise displacement because the cu. in. increase as the square of the bore — for example, a 1/8-in. overbore on the V8 increases displacement 8½%, while the same overstroke boosts it only 4%. That's why, dollar for dollar, you should bore before you stroke.

However, we didn't include boring in our "conservative" and "medium" souping categories because it is still not the most inexpensive way to raise HP. Boring your V8 block will cost you about $20, and with the oversize pistons and rings you'll need, your total investment will be $60-70, for an average HP increase of 10%. Not too good.

Now if you're souping only a little, and your block is badly worn and needs reboring, Ford supplies standard oversize pistons in several sizes up to 0.040 in. over at about $25 a set. However, at about this same price, there are several brands of inexpensive 4-ring road pistons on the market in sizes up to 1/8 and even 3/16 in. over; these should be considered if you must rebore anyway.

As for maximum bore recommendations on the Ford-Merc V8 block, experts disagree. Some late Merc blocks have been bored out as much as 1/4 in. and held up. But this was just luck, because block castings vary considerably due to "creep" and warp in the foundry. Thus when they bore originally in the factory, the bore may not come exactly in the center of the casting cylinder, and the wall may vary in thickness. Then if you get it too thin in spots by overboring, the wall will literally whip and chatter at high RPM and will quickly crack.

Therefore if you want your engine to stand up, we recommend a maximum overbore of 1/8 in. on the old pre-1939 Ford V8 block, and 3/16 in. on the later blocks. And we'd always recommend your going the maximum, because you might as well get the most for your money! Incidentally, some post-1939 blocks had very thin replaceable cylinder sleeves; these are no good for a souped engine and should be removed, and oversize pistons used.

Before going on, we might mention another boring practice that has been used on the V8 block — and that is boring out the entire cylinder wall (3-3/4 in.) and fitting "wet" sleeves. This is a terrific and expensive job, as it involves boring out the wall, counterboring for the sleeve flange, tapping into the sleeve for the head studs, fitting the sleeve, and then somehow getting the thing to hold water (on which they say the odds are about 50-50!) At any rate, you get a bore of 3½ in. by this method (since the sleeve wall is 1/8 in.), which would give 318 cu. in. with 4-1/8 stroke! The job would run well over $100 without the pistons, but that extra displacement could be the difference between success and failure for a track engine. It's a questionable practice at best, though, so investigate very thoroughly before you take the jump.

And then there is honing. Opinions vary on the necessity of this, but

it's generally agreed that it's beneficial on very hot engines. And there are a good many ways of doing it — we know one guy who got beautiful, mirror-like cylinders with lard and toilet paper! The shop that bores your block will probably have some policy on this.

THE CRANKSHAFT

The crank is the heart of your engine. And it's got to be set up right if it's going to pump 200 hp at 4500 rpm for very long! But give it half a chance, and the toughness of this piece of stock equipment will amaze you.

If you're in the "conservative" and "medium" souping categories, the crank will be no problem. As we mentioned earlier, just "mike" the main and rod journals at several points to see that they're not worn over 0.001 in. undersize. (Standard main journals are 1.999 in. on pre-1937 blocks, 2.399 in. 1937-1938, and 2.499 on all later Fords and Mercs; rod journals are 1.999 in. on all pre-war Fords, and 2.139 on all Mercs and post-war Fords.) If your crank is worn too much, you can have it ground to take a standard undersize bearing; this job will run about $10.

But there might be a better way: If you have a 1939 block or later, you can use a standard late Merc crank (post-1949) without any changes! This has a 4-in. stroke, costs about $45, and should increase your HP some 7%. We've recommended this as a straight souping step on the hot road engine. (Of course, due to the long stroke, you'll also have to use

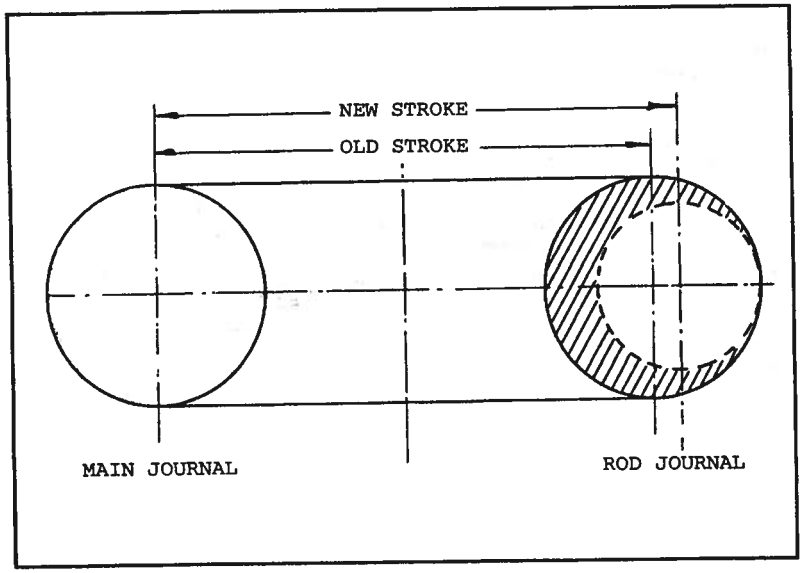

Fig. 5-2. Drawing illustrating what is done in "stroking"; the shaded area is ground off to increase the stroke length.

late Merc pistons, if you haven't bored, but the total price is still not a bad deal.) In other words, rather than spend a lot of dough to have an old 3-3/4 in. crank fixed up, why not put the money in a new 4-in. Merc crank?

As a matter of fact, the introduction of the long-stroke Merc in 1949 has thrown an entirely new light on this whole business of "stroking." You all know what this means — that is, grinding down the crankpins off center to lengthen the stroke; the stroke is lengthened by twice the off-set of the pin center and the diameter of the pin is reduced by the same amount (see Fig. 5-2).

Now with the possibility of using a stock 4-in. Merc crank, why lay out $25 to stroke an older crank to 3-7/8 in.? As we mentioned, a new Merc crank and a set of corresponding pistons costs about $70 — whereas a 1/8-in. stroke job on an old crank, new pistons, — AND NEW RODS, would cost you considerably more. And you would get less HP.

So we've just got to revise our views a bit here. The best idea on the usual souping job now is to forget all about stroking (on post-1939 blocks). Just drop in a late Merc crank and let it go at that. If you still insist on more stroke, you can stroke the Merc 1/8 in. (to 4-1/8 in.) and use special 3/8-in. stroker pistons and pre-war Ford rods (usually 21A type). Incidentally, all that bother and expense will boost your HP about 3%!

In view of all these things, we'd make the following crankshaft recommendations: In the "conservative" and "medium" categories, leave the crank as is, unless it needs a major regrinding. In this case, toss it out and use a new Merc crank — and since you've got the engine down, bore out 3/16 in. and fit special pistons. In the case of a hot road engine, use the new Merc crank anyway, perhaps stroking it 1/8th. For competition engines, when you're after that last HP, the extra stroke is important.

This brings us to that questionable trick of "metallizing." In this, they grind the crankpin down off-center, spray a heavy coating of molten metal around the pin (where it fuses like a weld), and then regrind to size. The idea is to greatly lengthen the stroke without decreasing the diameter of the pin, so they can use stock rods and bearings. Stroke increases up to ½ in. can be had in this way. However, it's a practice that has been much criticized because, quite often sections of the sprayed-on metal break off at high RPM — and really go to town in the lower half. In our opinion this science of metallizing is far from being developed yet, and since the late Merc crank gives a pretty substantial stroke to begin with, we suggest you forget about it.

That about takes care of the crankshaft. However, before we go on, we might mention some refinements for the guy who's building up a red-hot competition job, and nothing is too much trouble. One practice is to grind excess stock off the crank arms at the very "beefy" sections where it won't effect the strength in any way. About 6 lbs. of steel can be usefully removed in this way, and it will help your acceleration just a hair.

Another thing you can do is to machine and polish the shaft all over

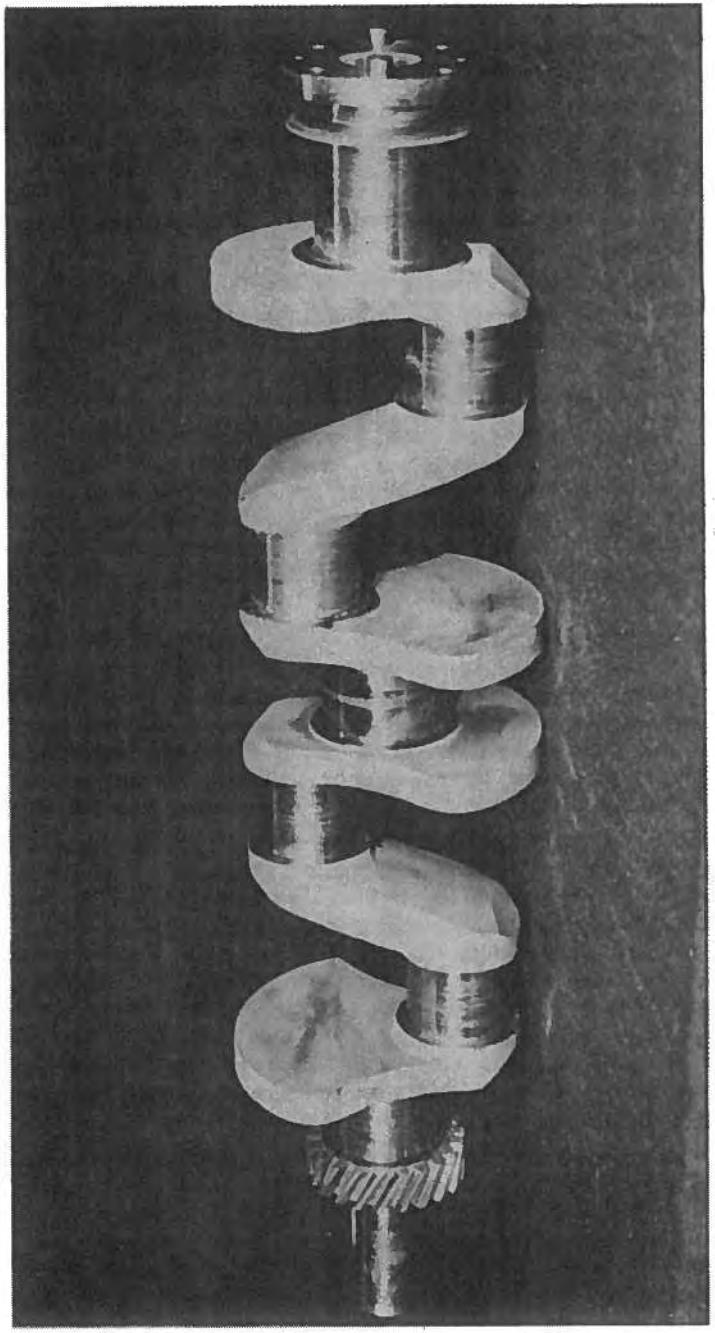

Fig. 5-3. Barney Navarro's special 180° crank with 3-in. stroke, built for his Class A Lakes car (176 cu. in.). These shafts are considerably lighter than the stock unit and increase acceleration somewhat, but have no effect on peak HP.

in an effort to reduce "oil drag." Oil will cling to a rough surface, which means its weight must be accelerated if the surface is in motion. By smoothing and polishing the crank surface, the drag of this oil is greatly reduced and there is a slight torque gain (we don't have any dynamometer figures showing the difference in HP between a rough and polished crankshaft, but the idea is logical anyway!).

One more thing—about these special 180° cranks. With these, two cylinders on the same bank fire simultaneously and we get, in effect, a four-cylinder firing order. The only advantage here is that the crank can be considerably lighter for added acceleration. However, because of the odd drawing impulses through conventional multiple manifolds, mixture distribution is poor, which kills off some of the potential acceleration. These cranks would only be practical for track work, but we won't take a stand one way or the other.

PISTONS AND RINGS

Pistons are a big factor in the performance of an engine. They have

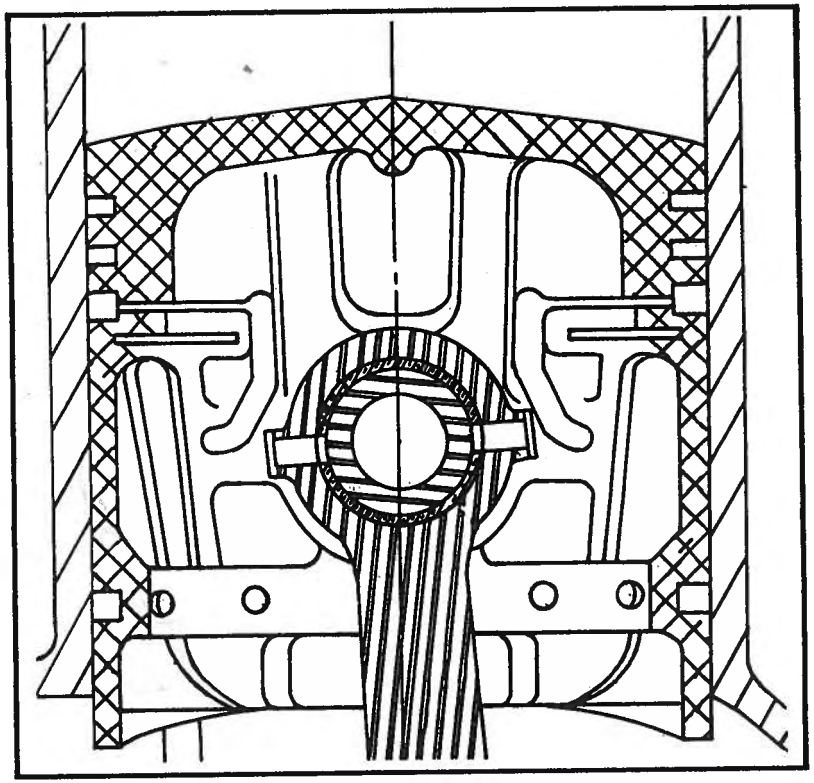

Fig. 5-4. Sectional view of the stock Ford 59A piston.

Automotive / Nostalgia

This Roger Huntington classic will help you understand how things were done around 1951.

Shows classic speed equipment developed and manufactured by Ardun, Belond, Besasie, Champion, Frenzel, Harman-Collins, Hilborn, Howard, Iskenderian, Italmeccanica, Kong, Mallory, McCulloch, Navarro, Offenhauser, Roemer, Smith & Jones, Spalding, SpeedOmotive, Stephens, Tattersfield-Baron, Tornado, Vertex, Weber and Winfield.

Explains the V-8 family tree, planning the job, block modifications and assembly, cylinder heads, intake manifolds and carburetors, ignitions, superchargers, estimating horsepower, and how to get the most performance for your money.

Reprinted from the original 1951 edition which sold for $2!

A classic guide for any auto buff's library.

$19.95 U.S.

ISBN-10 1-931128-08-1
ISBN-13 978-1-931128-08-7
51995
9 781931 128087

California Bill's
Automotive Handbooks

California Bill's
Automotive Handbooks

HOW TO HOP UP FORD & MERCURY V8 ENGINES

Author: Roger Huntington
Price: $19.95
ISBN: 9781931128087
Dimensions: 8.5 x 5.5 x .5 inches
Weight: 0.56 lbs

Speed tuning theory and practice, costs, horsepower and torque for all 1932 and later Ford & Mercury Flathead V8's. Details on planning the modifications, fitting the block, boring and stroking, flathead and overhead-valve cylinder heads, cams, pistons, rings, intake manifolds, exhaust headers and special ignitions. A special chapter discusses superchargers. This Roger Huntington classic will help you understand how things were done around 1951. Shows classic speed equipment developed and manufactured by Ardun, Belond Besasie, Champion, Frenzel, Harman-Collins, Hilborn, Howard, Iskenderian, Italmeccanica, Kong, Mallory, McCulloch, Navarro, Offenhauser, Roemer, Smith & Jones, Spalding, SpeedOmotive, Stephens, Tattersfield-Baron, Tornado, Vertex, Weber and Winfield. Explains the V-8 family tree, planning the job, block modifications and assembly, cylinder heads, carburetors, estimating horsepower and how to get the most performance for your money. A classic guide for any auto buff's library.

CLICK TO PURCHASE

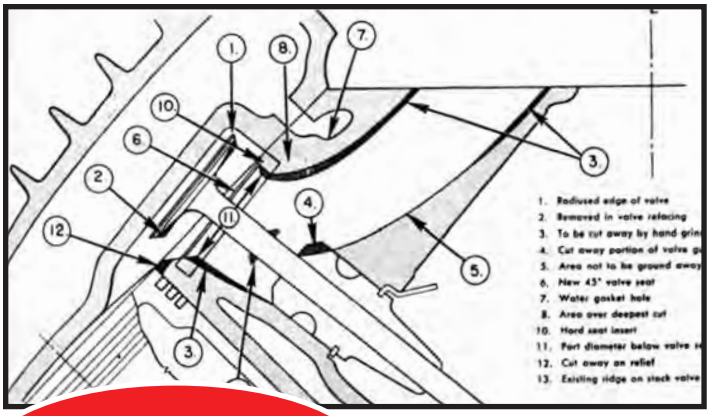

Howard drawing on porting, relieving, and stock valve modifications.

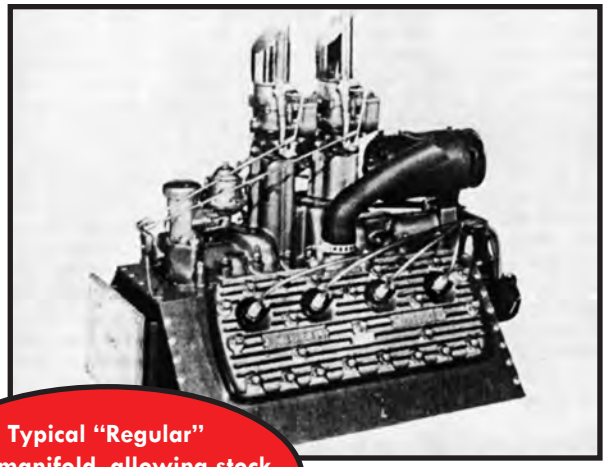

Typical "Regular" dual manifold, allowing stock placement of generator and fuel pump.

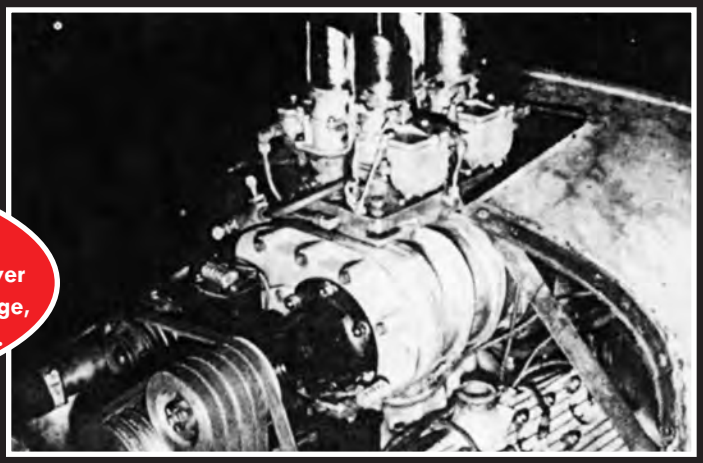

Blower installation on Barney Navarro's famous Lakes roadster that clocked 147 mph. This is a reworked G.M. blower with four stromberg 48 carbs. In its ultimate stage, the engine developed 240 hp from 176 cu. in. on 16 lbs. boost!

California Bill's Automotive Handbooks
PO Box 91858 | Tucson, AZ 85752-1858 | Phone: (888) 511-1530 | Fax: (888) 511-1501

Table of Contents:

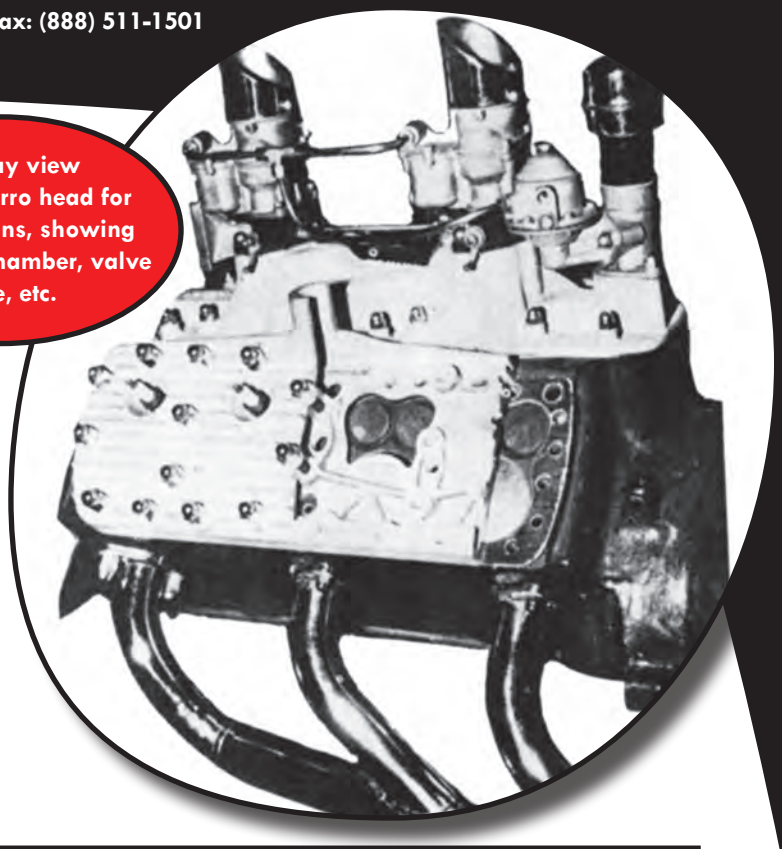

Cutaway view of the Navarro head for domed pistons, showing combustion chamber, valve space, etc.

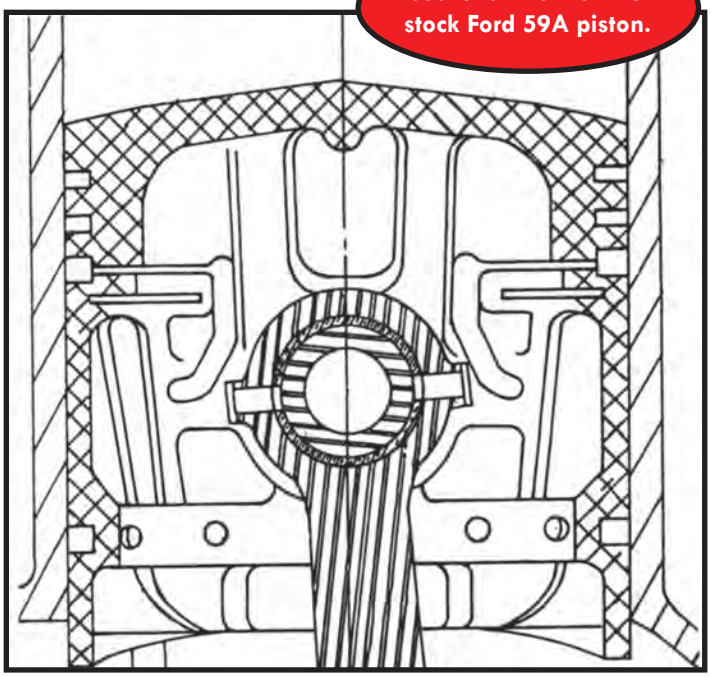

Sectional view of the stock Ford 59A piston.

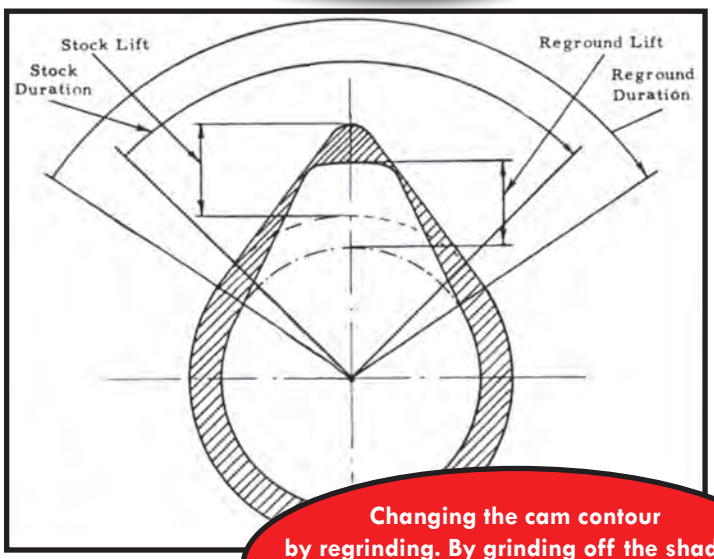

Changing the cam contour by regrinding. By grinding off the shaded portion, valve timing and lift can be altered in most any way we wish.

Roger Huntington was known as the dean of automotive technical writers in the early era of hot rods and racing performance. Although wheelchair-bound due to a swimming accident at age 15, this didn't stop Roger in his quest for automotive knowledge. You just never knew when or where you would see Roger–at drag races, at press introductions at GM, Ford, or Chrysler, out "test-driving" as he rode along and got impressions of how a new car handled and performed. Then he would write about what he learned and what he felt about the car. His byline appeared in almost every automotive magazine in the 1950s and 1960s including *Auto Car, Motor Trend, Car Life, Road & Track, Car & Driver, and Hot Rod Magazine* to name a few. He wrote a regular column for *Speed & Custom Dealer* for more than 15 years.

Roger Huntington's name was synonymous with then-current knowledge about high performance.

You will enjoy reliving history as you turn the pages of this automotive performance classic.